crosswater

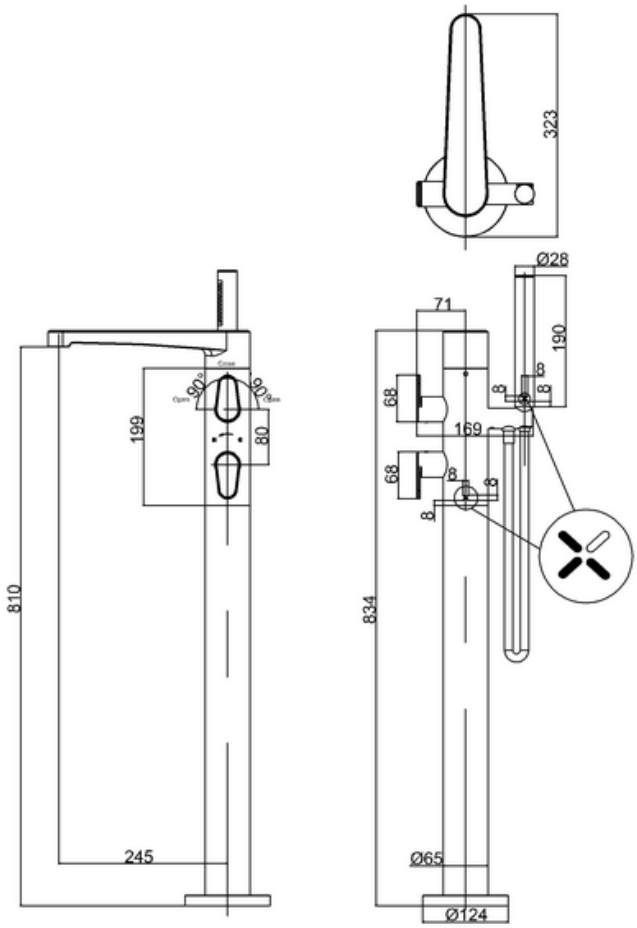

CT418TFC - Celeste Floor Standing Mixer & Kit Chrome